MADE IN CHINA

Intertek GS CE RoHS

EC REP
SCHEUFER Technologies GmbH
Address: Hertleinstrasse 37, 91052, Erlangen, Germany
E-mail: Mark.Zhang@scheufer.com

UK REP
VISHTEC UK Co.,Ltd
Address: Unit G25 Waterfront Studios, 1DockRoad, London, E16 1AH
E-mail: Vincent.feng@vish-tec.com

TOPSHAK

User Manual

TS-EP2

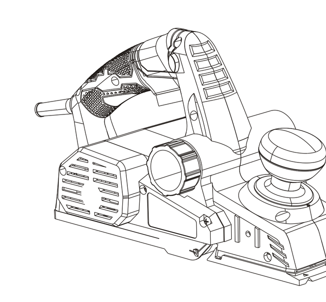

Leading new generation tool

Contents

English...01-06
French...07-12
German..13-18
Italian...19-24
Spanish..25-30